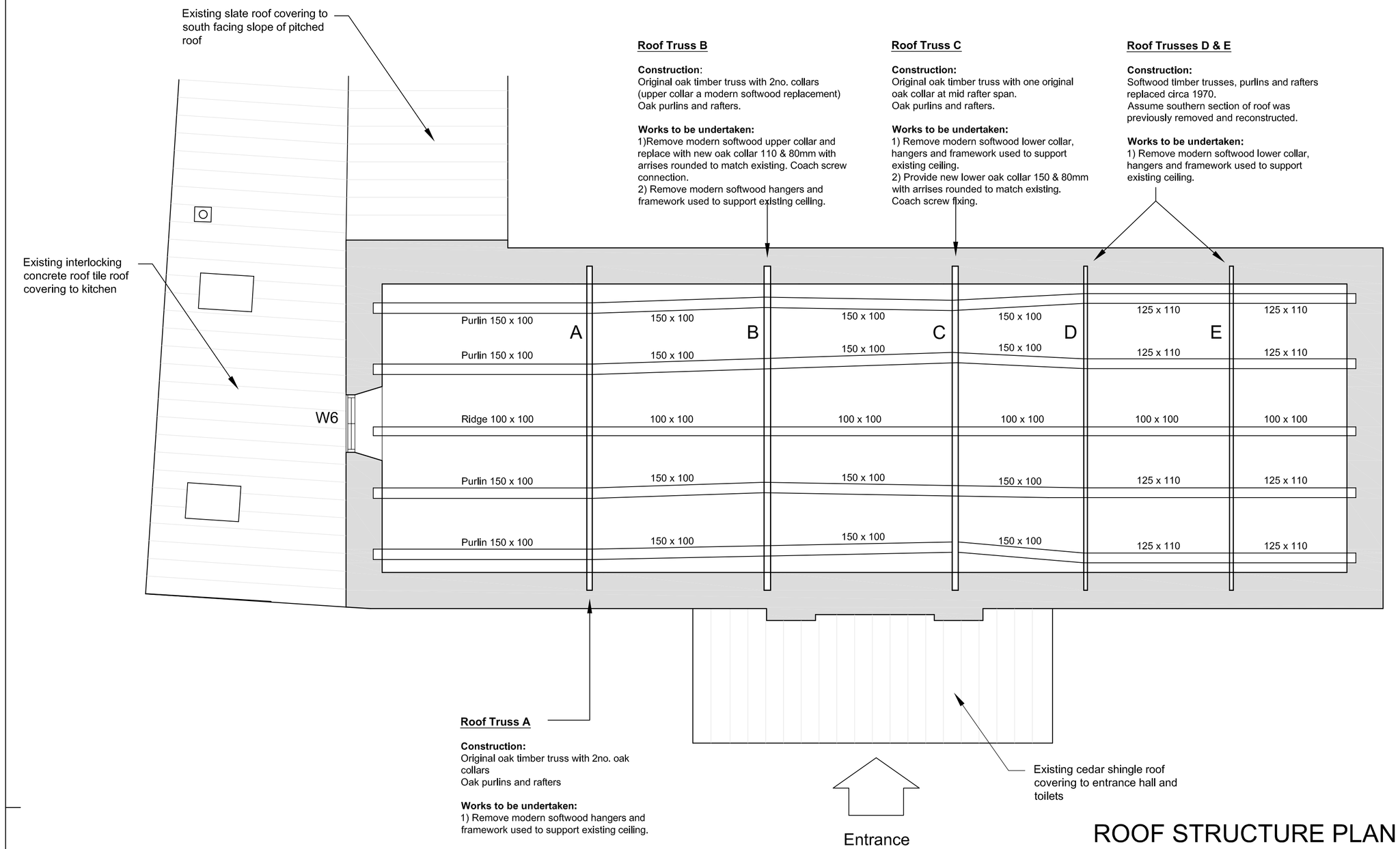

ROOF STRUCTURE PLAN
1: 50

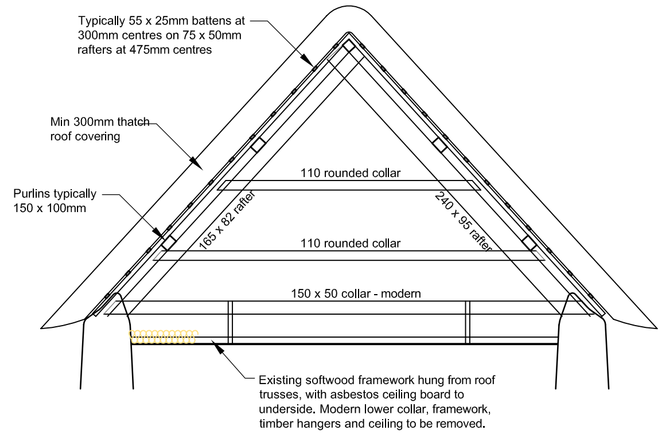

EXISTING TYPICAL ROOF TRUSS ARRANGEMENT TO ORIGINAL SECTION OF ROOF (TRUSSES A, B & C)
1 : 50

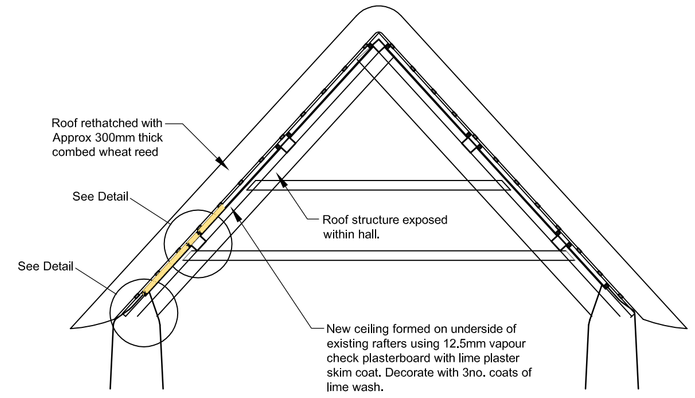

PROPOSED TYPICAL ROOF TRUSS ARRANGEMENT TO ORIGINAL SECTION OF ROOF (TRUSSES A, B & C)
1 : 50

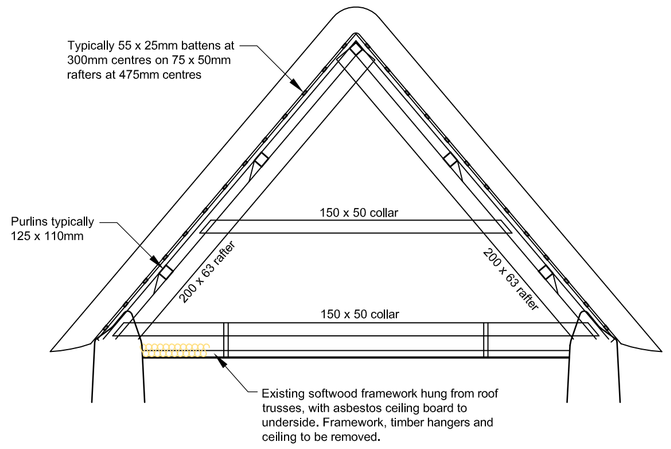

EXISTING TYPICAL ROOF TRUSS ARRANGEMENT TO RECONSTRUCTED SECTION OF EXISTING ROOF (TRUSSES D & E)
1 : 50

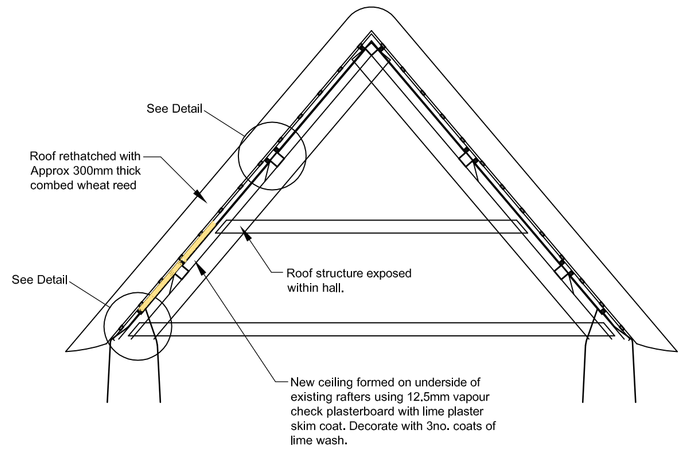

PROPOSED TYPICAL ROOF TRUSS ARRANGEMENT TO RECONSTRUCTED SECTION OF EXISTING ROOF (TRUSSES D & E)
1 : 50

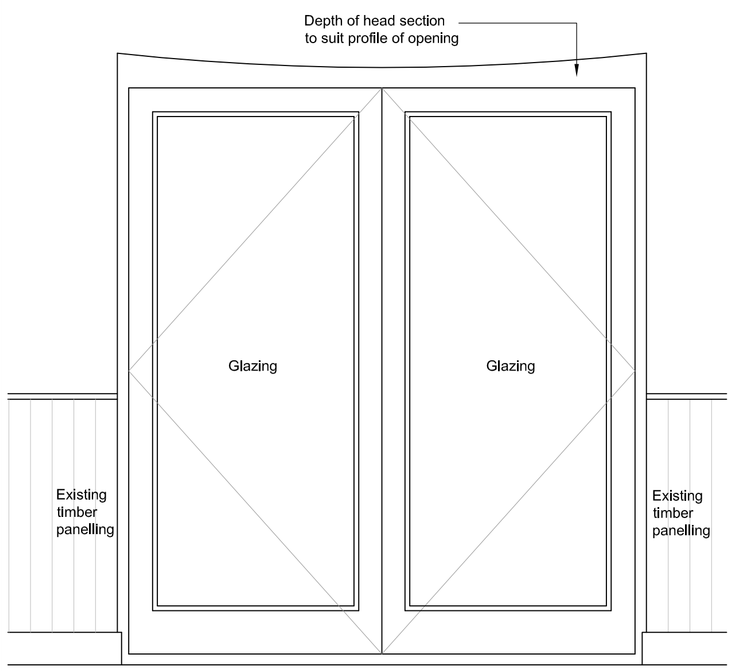

PROPOSED ELEVATION OF NEW GLAZED DOORS TO FORMER REAR THRESHING DOOR OPENING
Scale 1:20

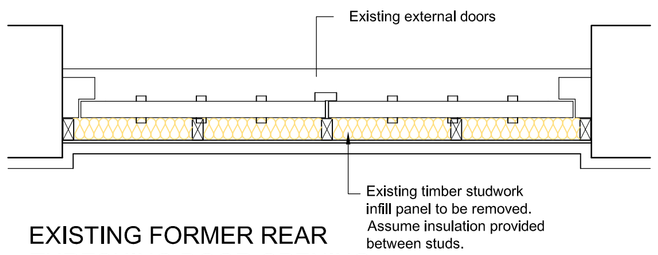

EXISTING FORMER REAR THRESHING DOOR OPENING
Scale 1:20

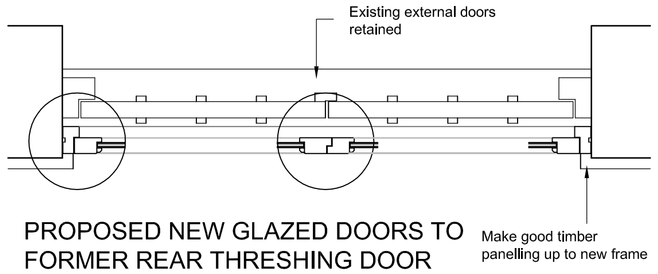

PROPOSED NEW GLAZED DOORS TO FORMER REAR THRESHING DOOR OPENING
Scale 1:20

Glazed Doors (FD30S)
88mm thick oak glazed doors in 140 x 75mm frame.
Finish: Clear lacquer.
Fire resistant double glazed sealed units as L40.
Intumescent fire and draught seals all round.
Manifestation; 2no. rows of etched circles to inner pane.

Ironmongery:
1.5 pair of ball bearing hinges per leaf.
2no. mortice dead locks - high and low level. Oval cylinder. Both locks keyed alike.
Escutheons.
Cylinder pull to high level lock.
2no. Door stops - rubber with stainless steel carrier.

PROPOSED FIRE RESISTANT GLAZED DOORS TO FORMER REAR THRESHING DOOR OPENING - SECTION DETAILS
Scale 1:5

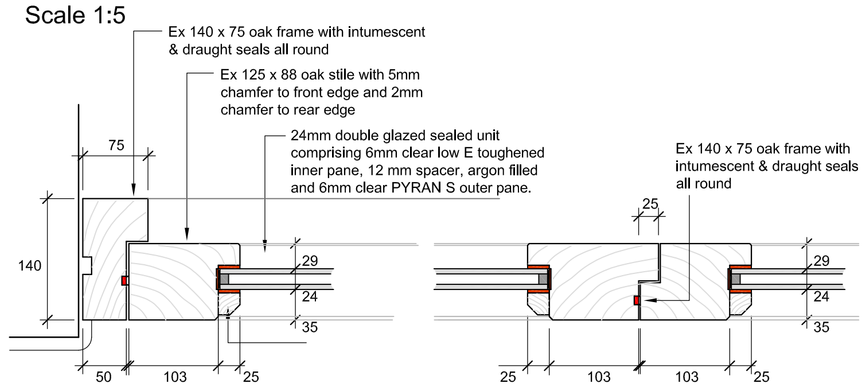

DOOR JAMB

MEETING STILE

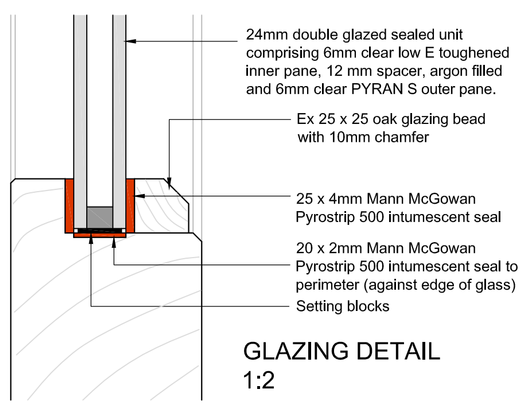

GLAZING DETAIL
1:2

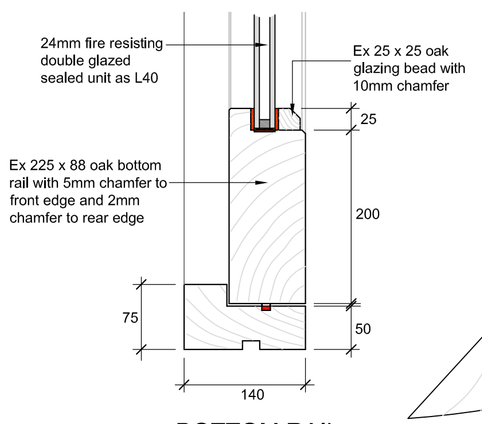

BOTTOM RAIL

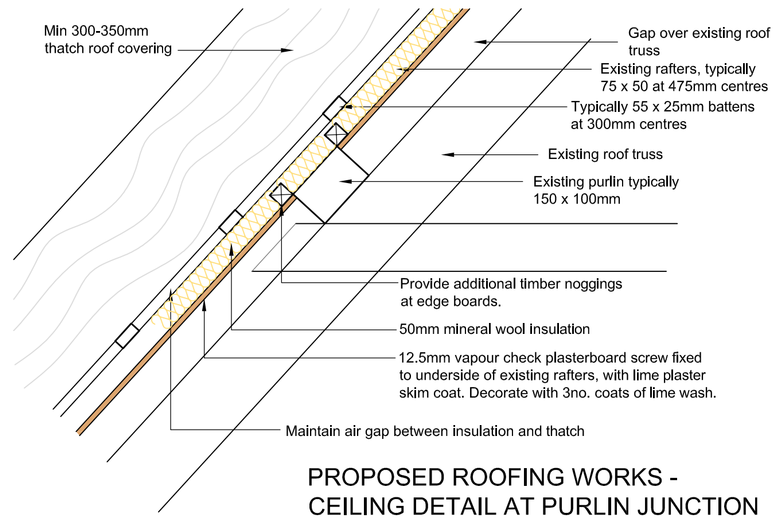

PROPOSED ROOFING WORKS - CEILING DETAIL AT PURLIN JUNCTION
Scale 1:10

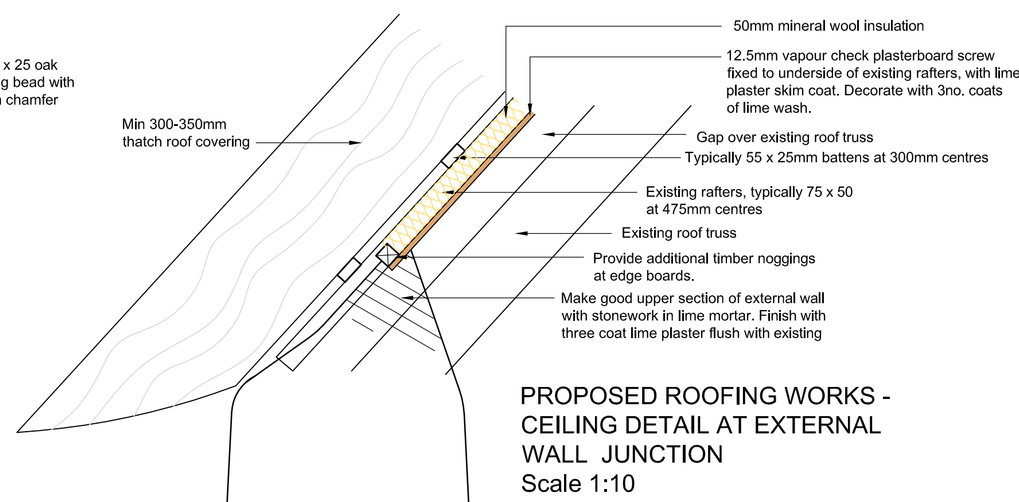

PROPOSED ROOFING WORKS - CEILING DETAIL AT EXTERNAL WALL JUNCTION
Scale 1:10

Amendments		Date	Initial
.	.	.	.
C	Glazed door fire resisting.	20/06/14	RDB
B	Mineral wool insulation to roof.	24/06/13	RDB
A	Roof section details. Glazed door details	06/13	RDB

Burn Valley Property
Chartered Building Surveyors
Yeomans Cottage
Drayford
Crediton
Devon
EX17 4SL
Tel / Fax: 01884 860288
RICS

Client :
East Worlington Parish Hall Management Committee

Project Title :
East Worlington Parish Hall
East Worlington. Crediton, Devon.
EX17

Drawing Title :
Proposed Improvement Works

Roof Plan & Section Details

Glazed Doors

Drawn By : RDB	Sheet Size: A1	
Scale: As Noted	Date : Oct 2012	
Project No. C053	Drawing No. C053 / 009	Amendment C